BT6AK1220 Dual Output Wiring Diagram

Two input sensor wiring methods are shown below. For a 3-wire RTD sensor, connect the Red wire to Terminal 10, and the other two wires to Terminals 11 & 12.

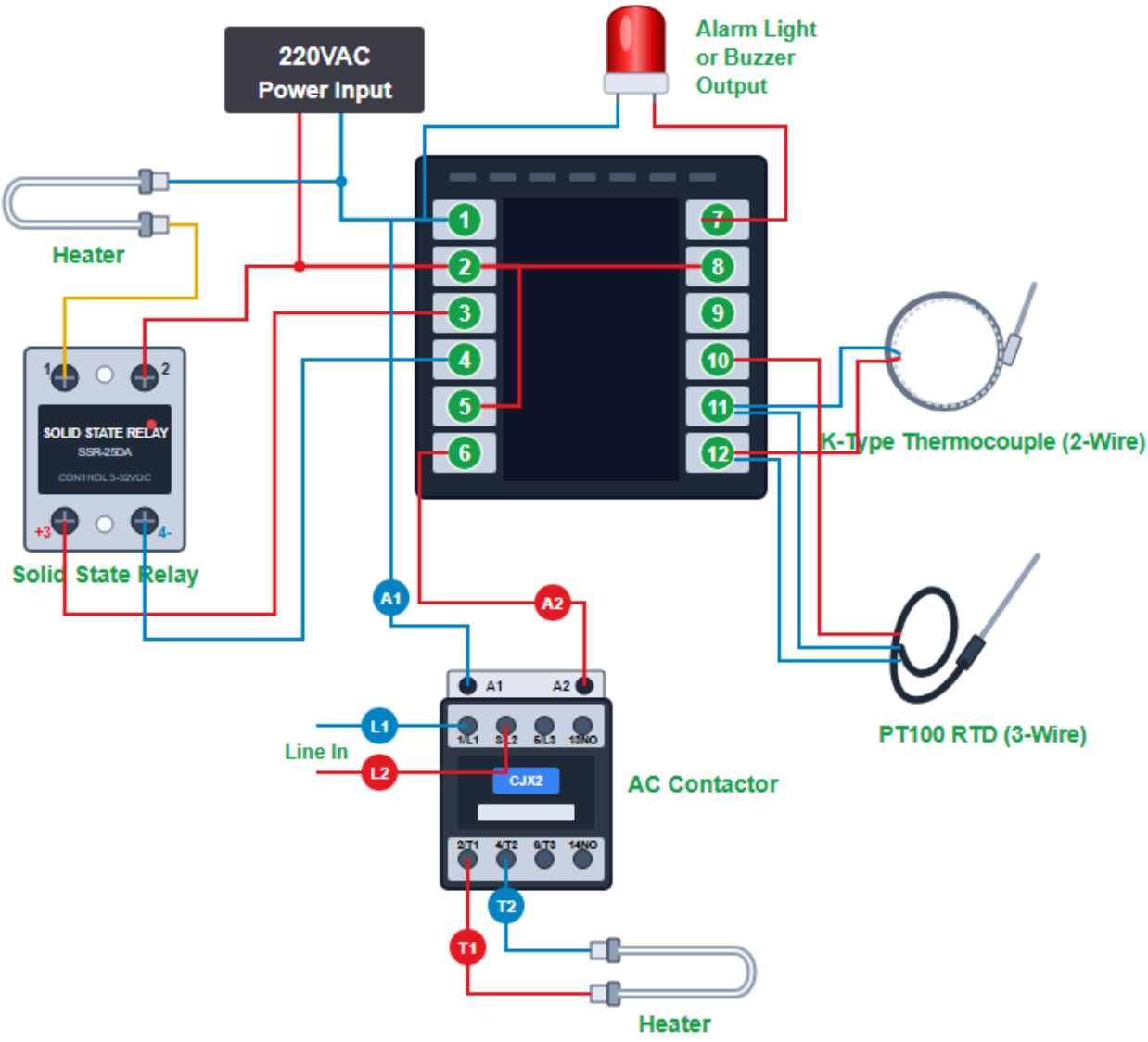

1–2: Power Input 2–5: Jumper 1–6: Main Output 2–8: Jumper
1–7: Alarm 1 Output 3–4: SSR Control Output
10–11–12: PT100 RTD 11–12: Thermocouple

BT6BK1220 Dual Output Wiring Diagram

Two input sensor wiring methods are shown below. For a 3-wire RTD sensor, connect the Red wire to Terminal 5, and the other two wires to Terminals 6 & 7.



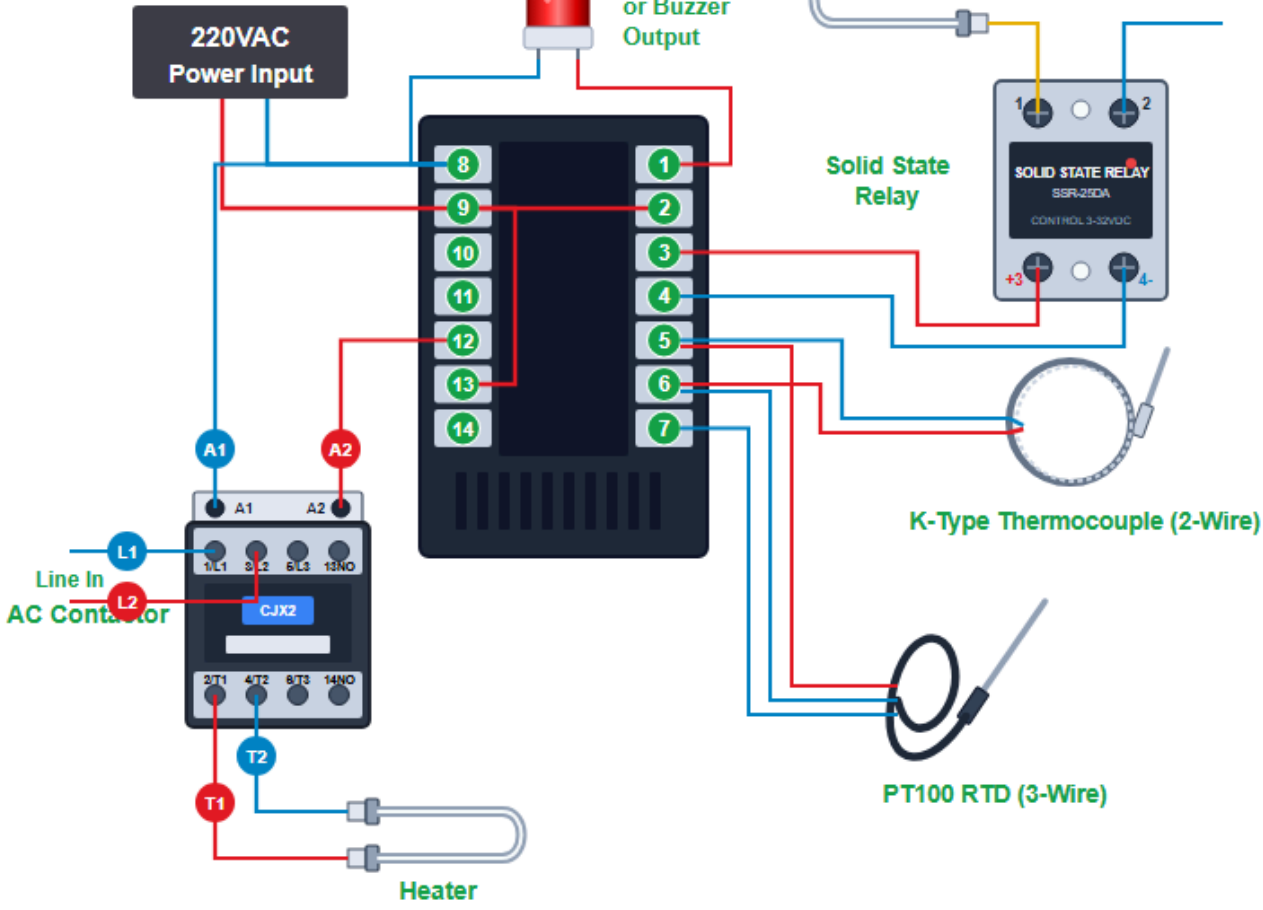

8–9: Power Input 9–13: Jumper 8–12: Main Output 9–2: Jumper
8–1: Alarm Output 3–4: SSR Control Output
5–6–7: PT100 RTD 5–6: Thermocouple

Dual Output Controller Wiring Diagram (14-Terminal)

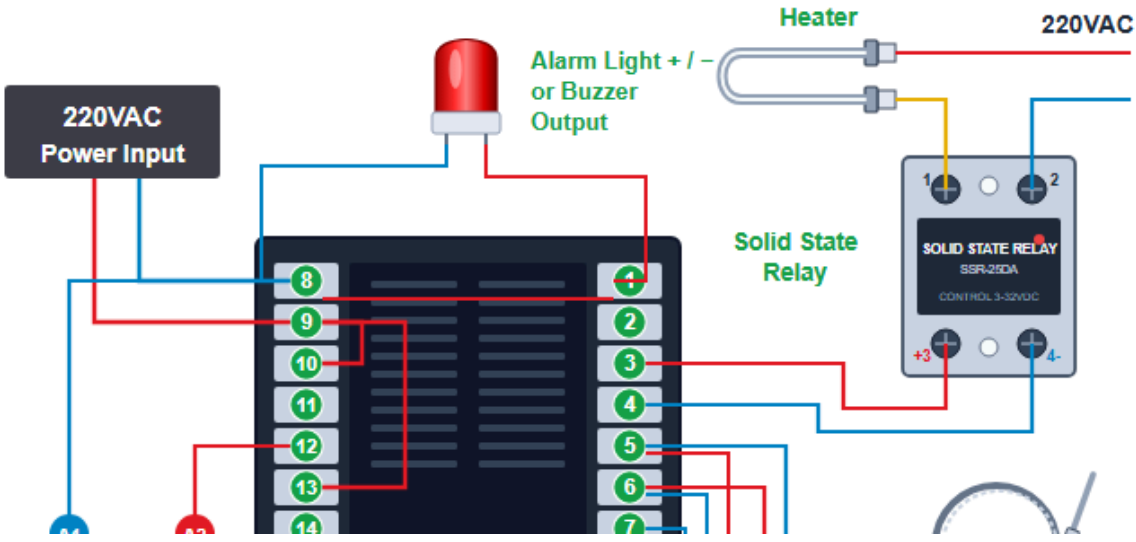

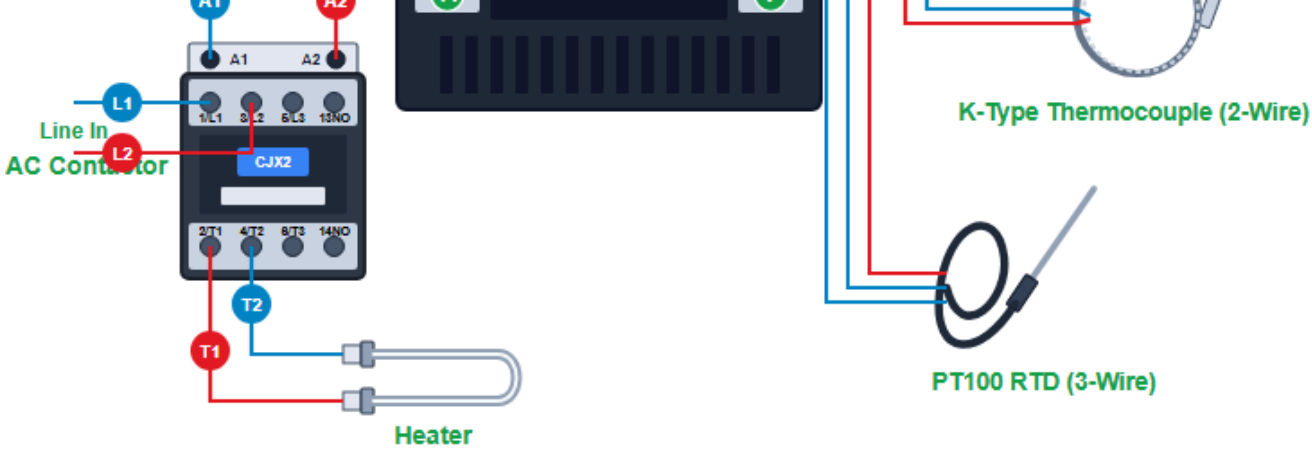

8–9: Power Input 9–13: Jumper 8–12: Main Output 9–10: Jumper

8–1: Alarm Output 3–4: SSR Control Output

5–6–7: PT100 RTD 5–6: Thermocouple