TC4H / TC4M / TC4L / TC4W | AC contactor

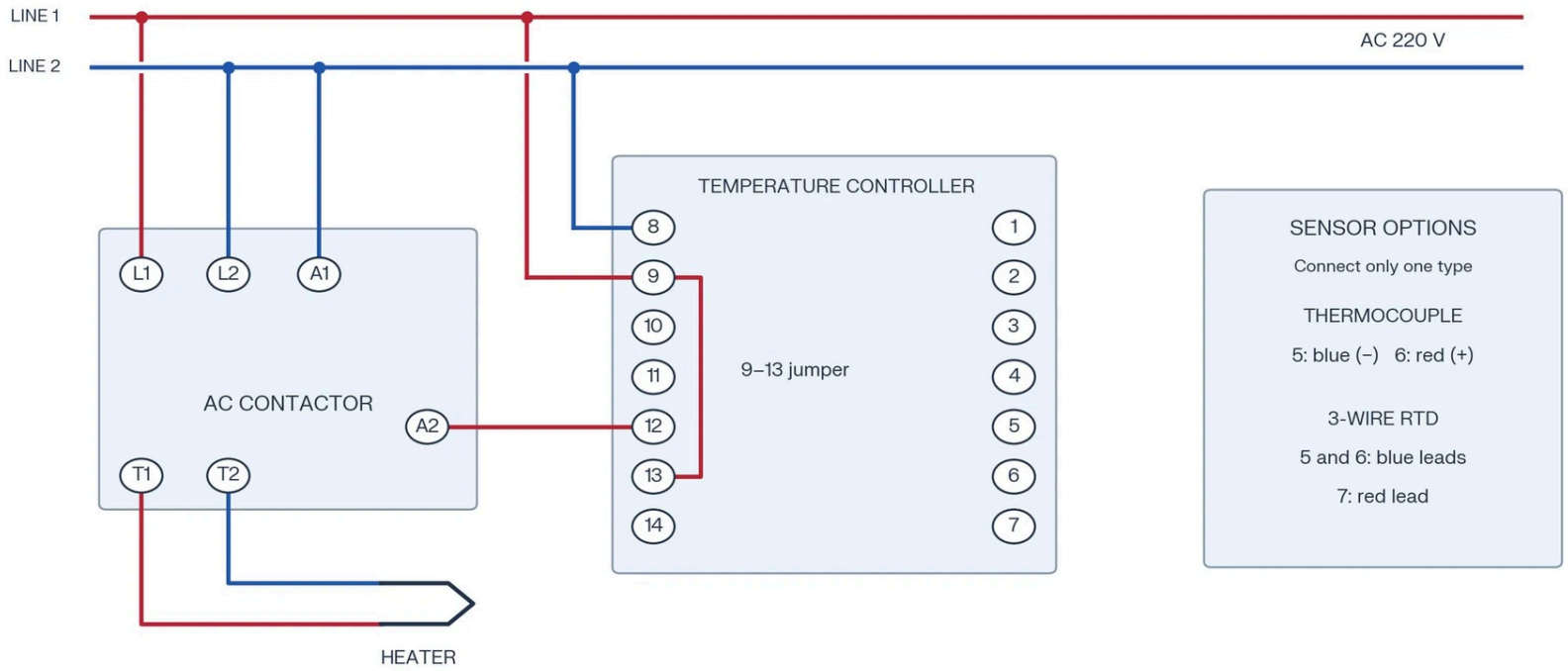

TC4H / TC4M / TC4L / TC4W | Solid-state relay (SSR)

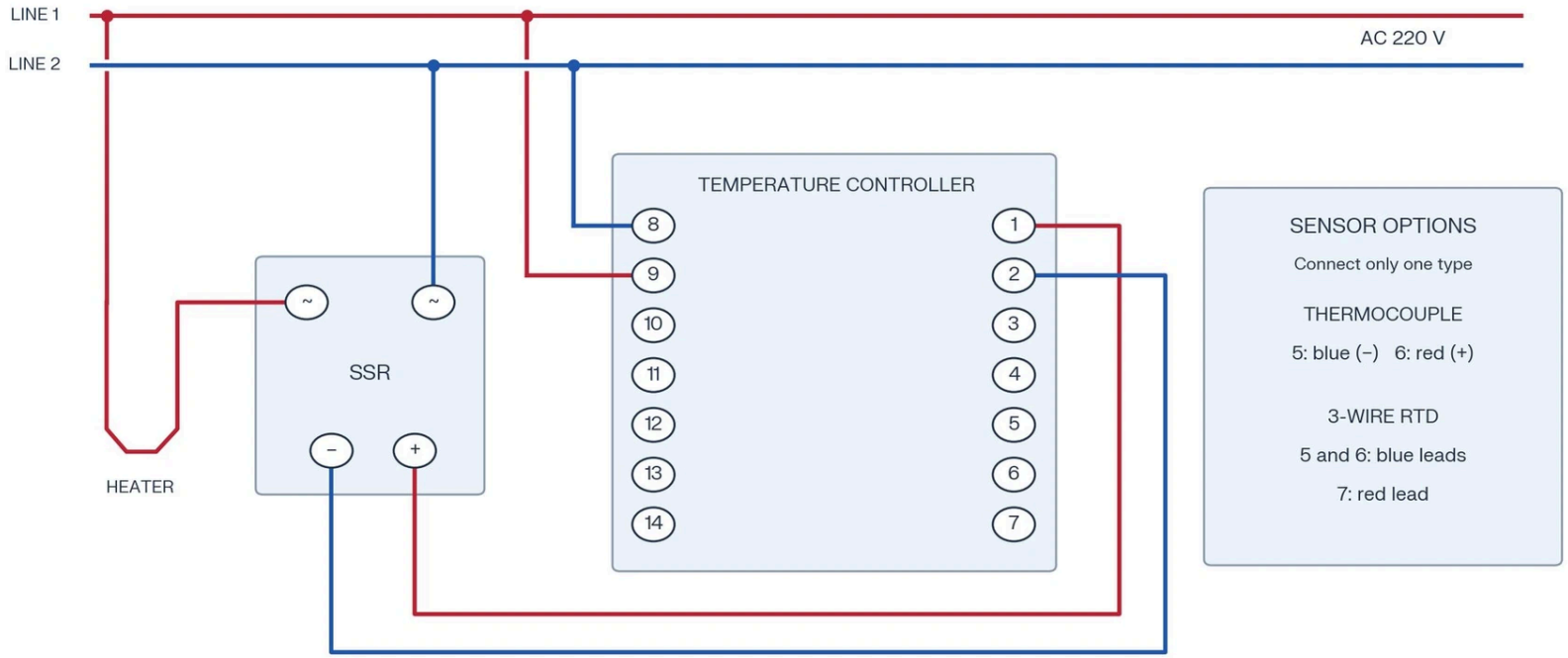

TC4H / TC4M / TC4L / TC4W

DUAL OUTPUT | AC 220 V ALARM BEACON

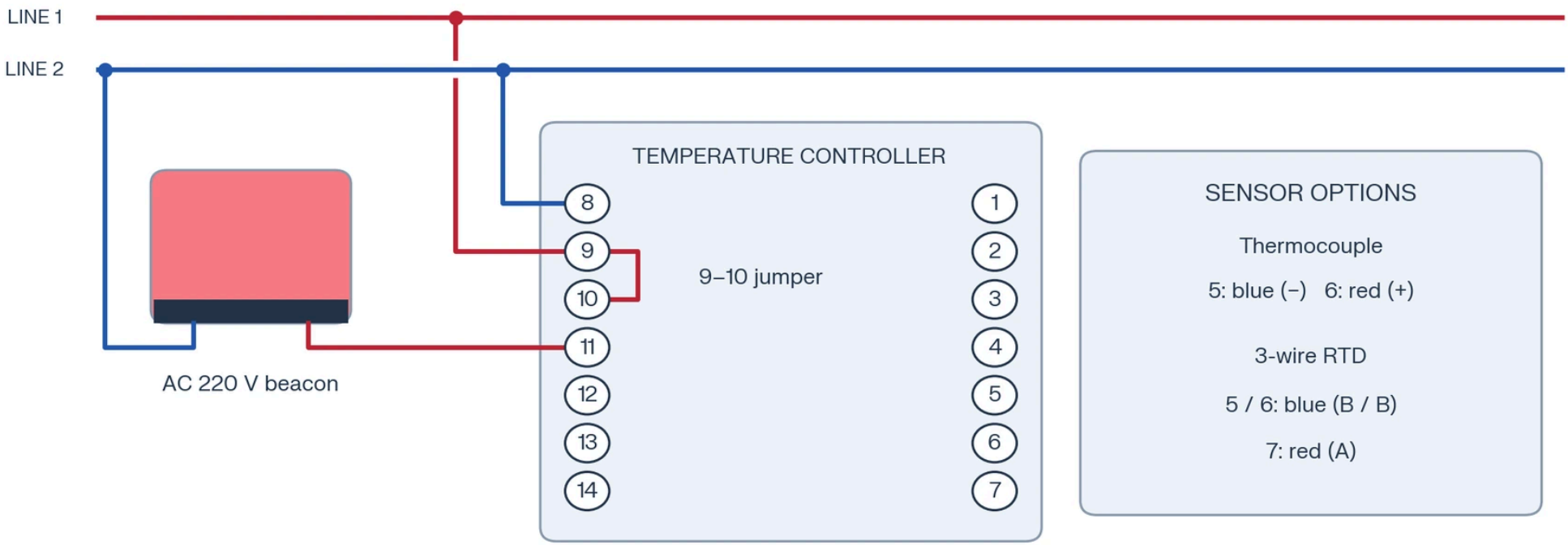

TERMINAL REFERENCE

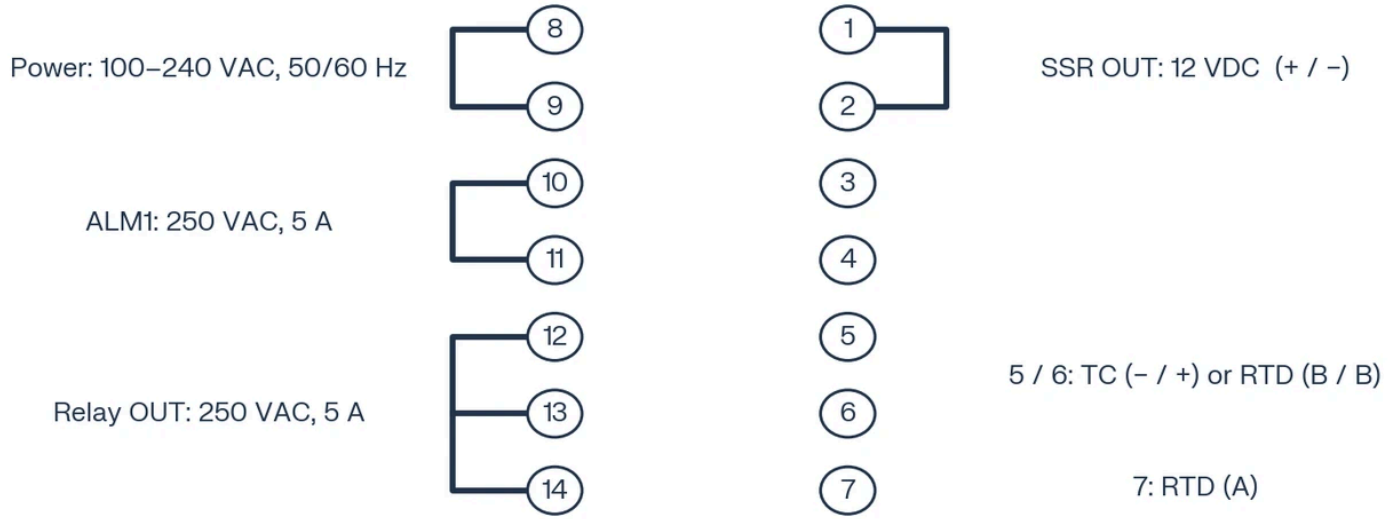

Terminal groups and ratings shown as marked in the original diagram.

TC4H / TC4M / TC4L / TC4W

RS485 MODEL | SOLID-STATE RELAY OUTPUT

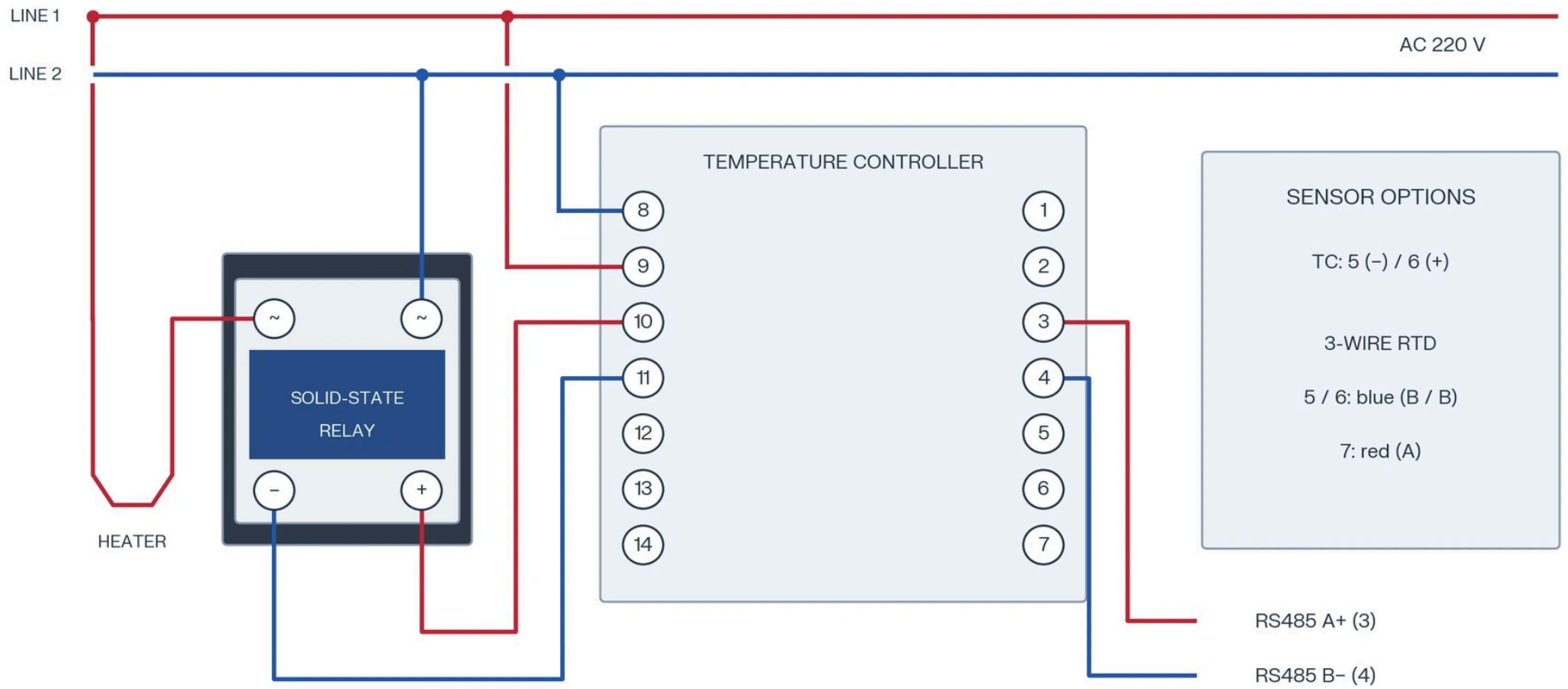

TERMINAL REFERENCE | RS485 + SSR VERSION

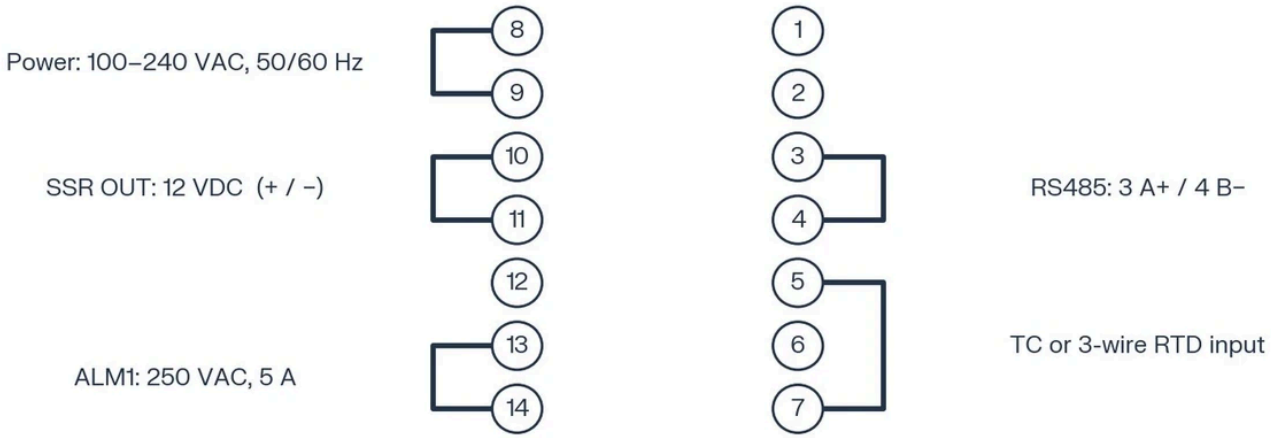

TC4H / TC4M / TC4L / TC4W | RS485 + AC CONTACTOR

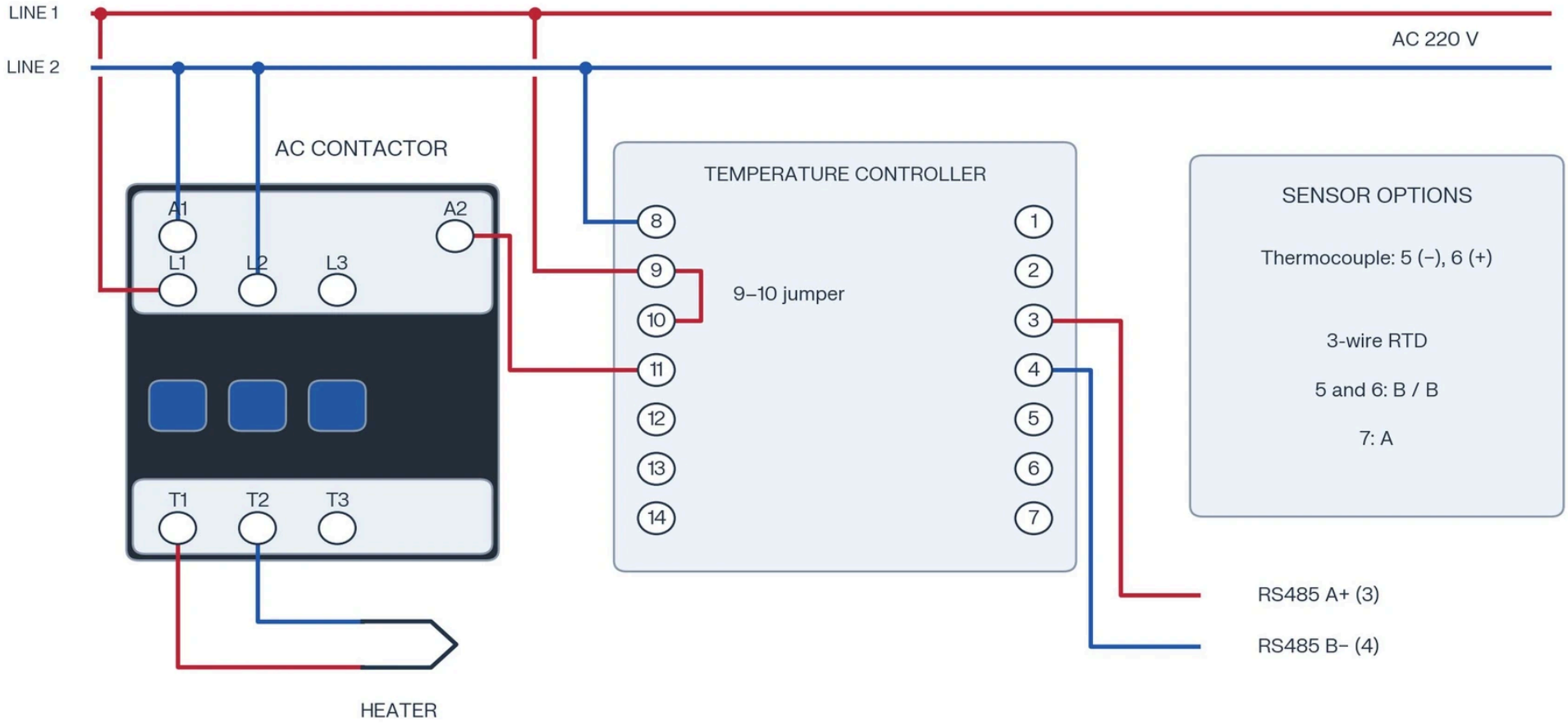

TERMINAL REFERENCE | RS485 RELAY-OUTPUT VERSION

