TC5 SERIES | DUAL-OUTPUT WIRING + TERMINAL DIAGRAMS

TC5-S | AC CONTACTOR

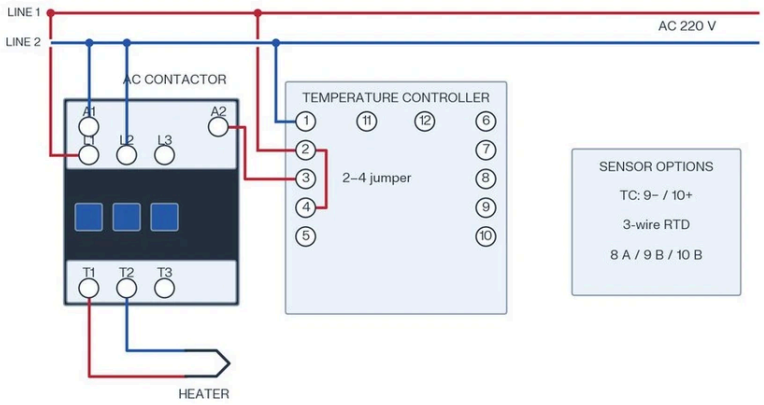

TC5-H / TC5-M / TC5-L | AC CONTACTOR

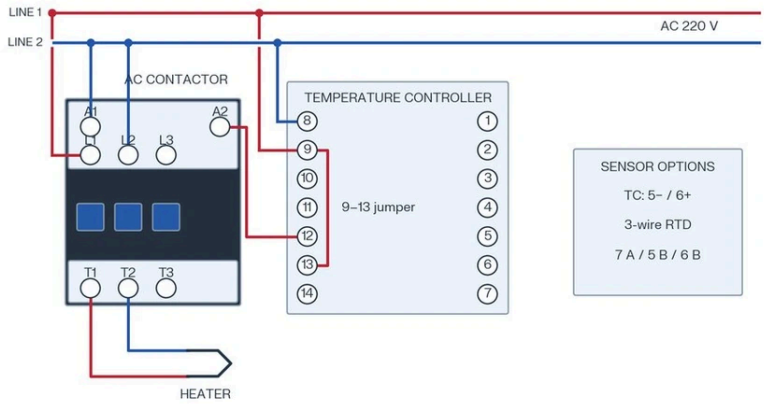

TC5-S | SOLID-STATE RELAY

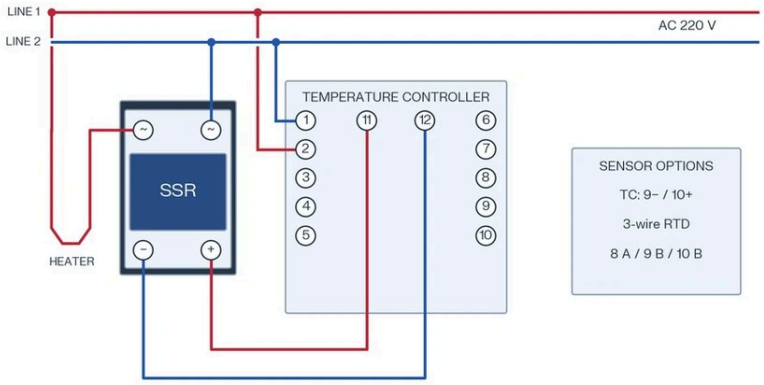

12 VDC SSR control output — no AC jumper

TC5-H / TC5-M / TC5-L | SOLID-STATE RELAY

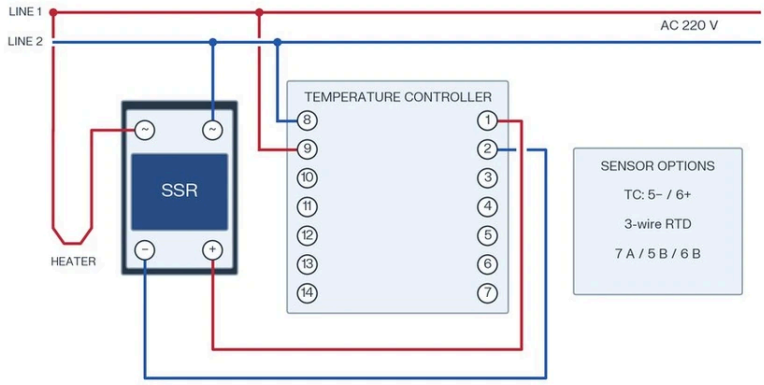

12 VDC SSR control output — no AC jumper

TC5-S | ALARM BEACON

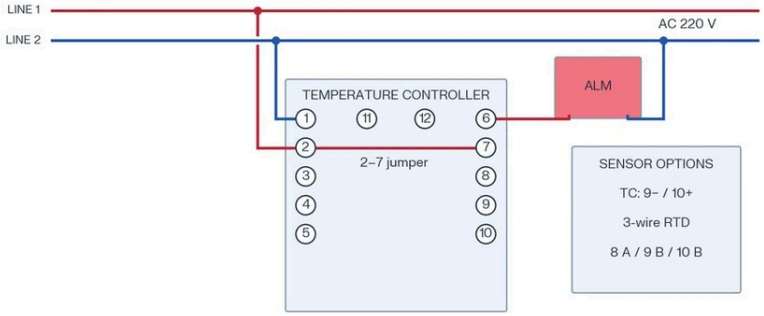

TC5-H / TC5-M / TC5-L | ALARM BEACON

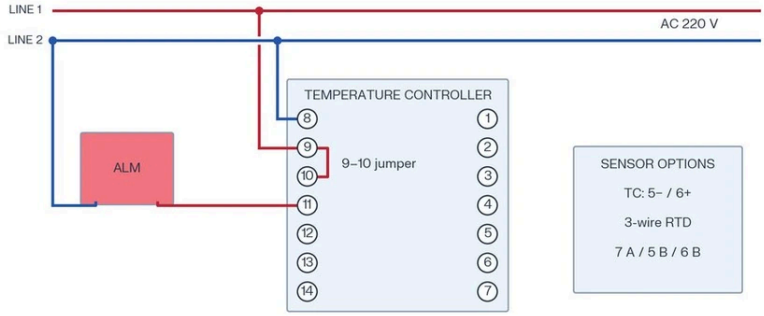

TC5-S | TERMINAL DIAGRAM

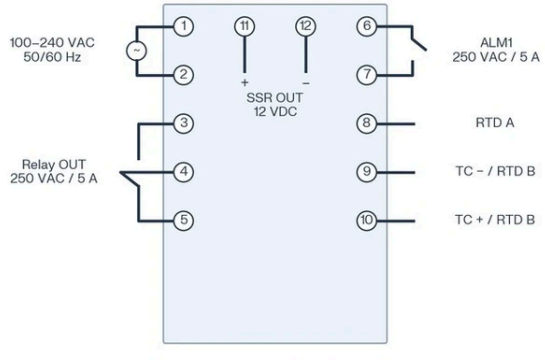

Rear terminal layout | TC or 3-wire RTD

TC5-H / TC5-M / TC5-L | TERMINAL DIAGRAM

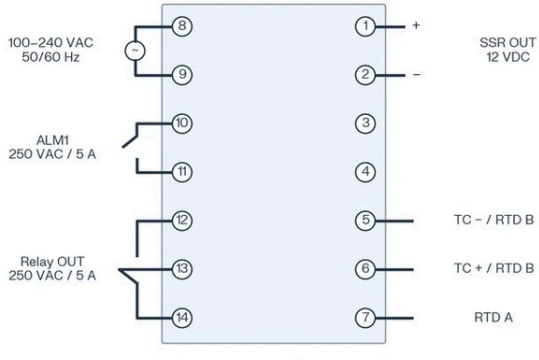

Rear terminal layout | TC or 3-wire RTD