Temp & Humidity Series Full Range

Product Wiring Diagram

WSK-Z(TH) Panel-Mount
Wiring Diagram

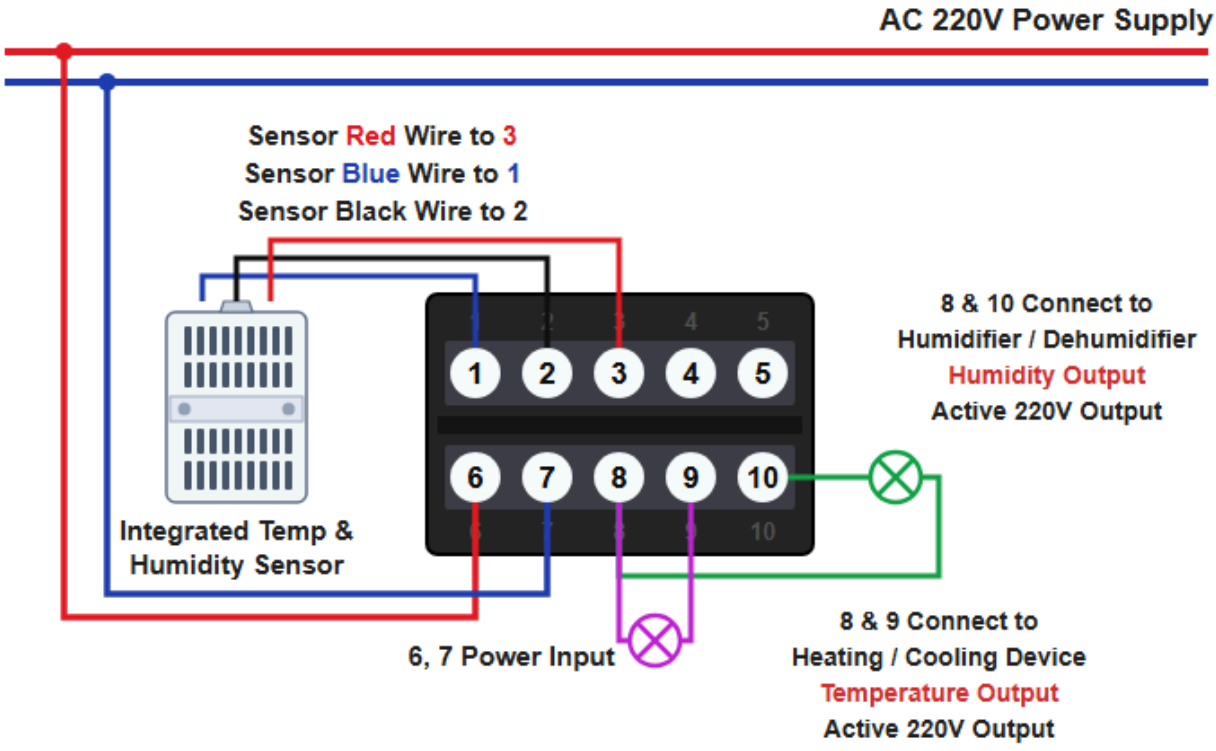

WSK-Z(TH) Panel-Mount
Electrician Wiring Schematic

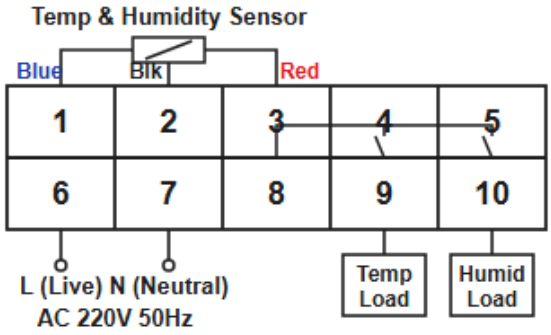

WSK-Z(TH) Socket-Mount
Wiring Diagram

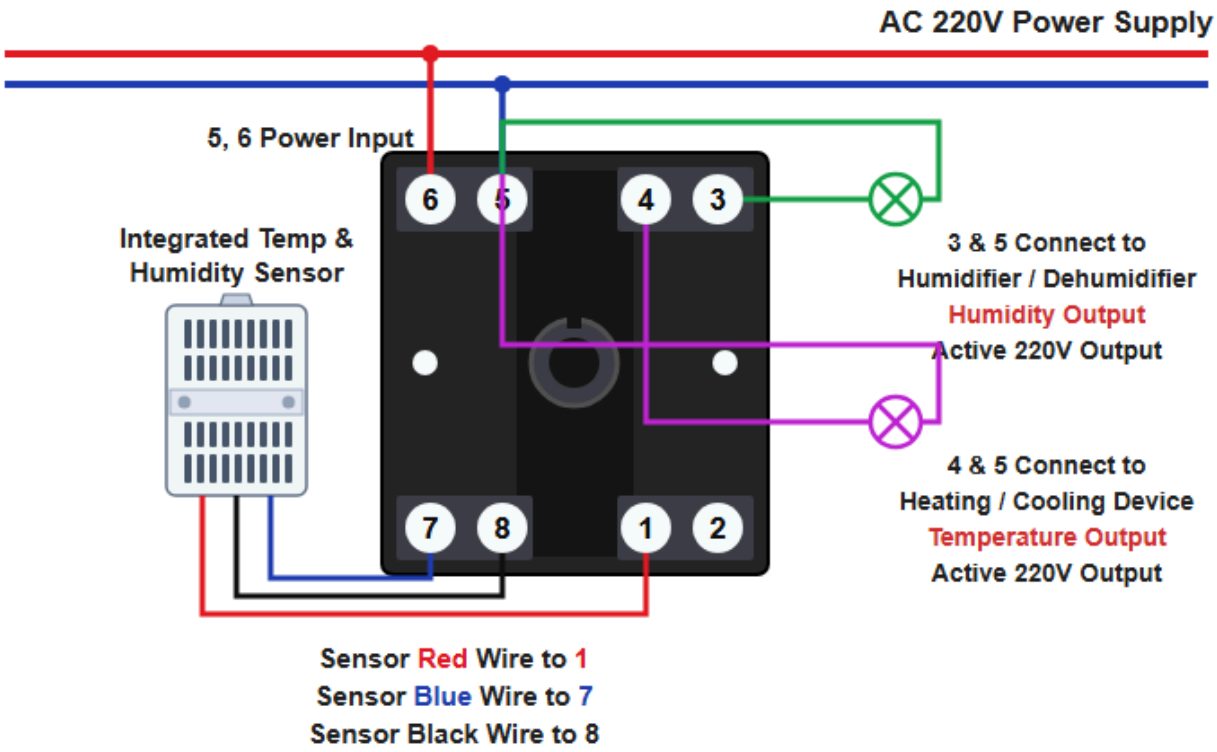

Note: Wire the socket according to the diagram above, then plug the 8-pin controller into matching terminals.

WSK-Z(TH) Socket-Mount
Electrician Wiring Schematic

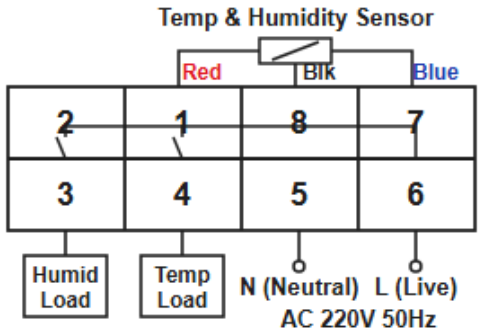

TDK0302
Wiring Diagram

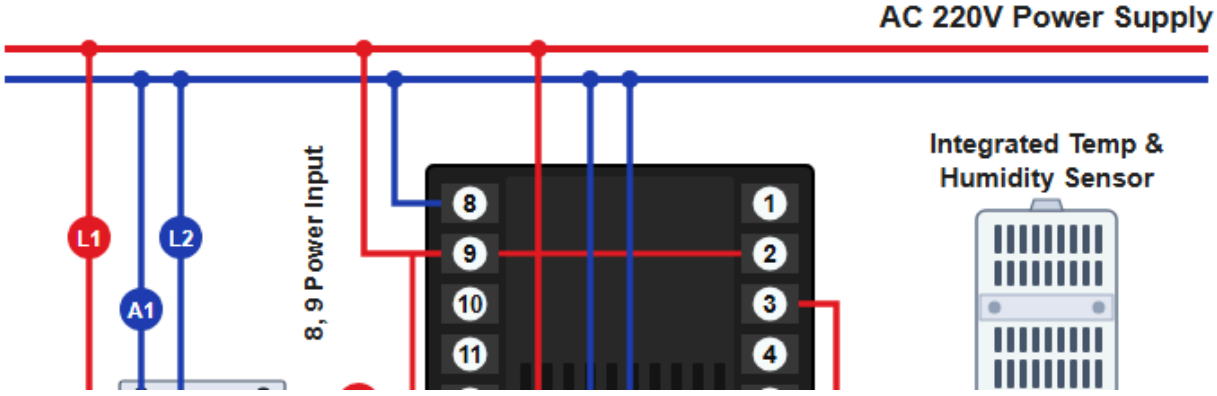

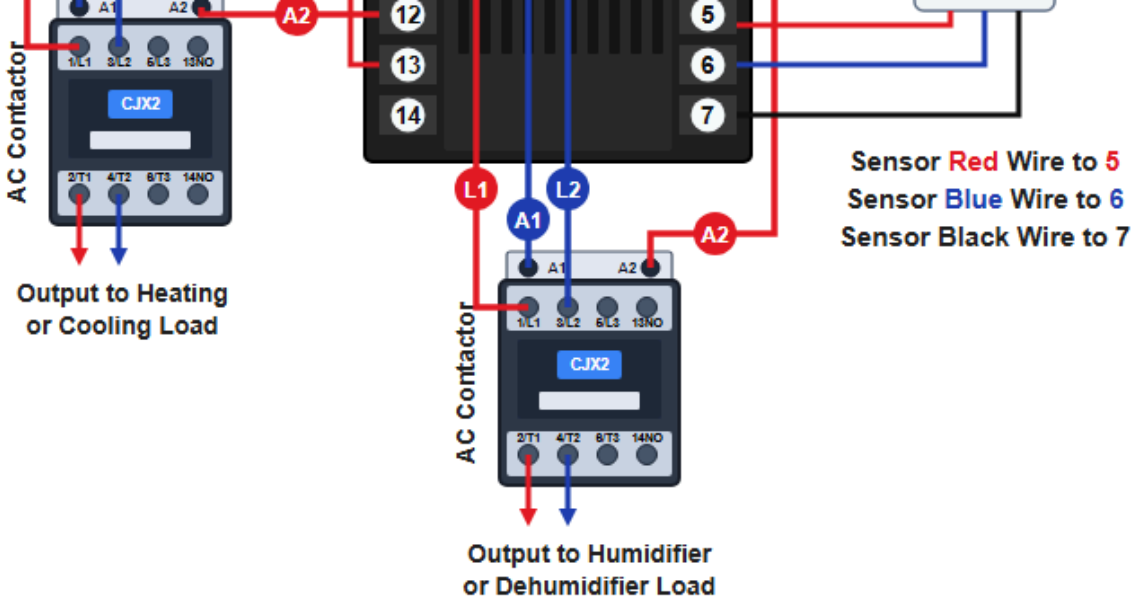

TDK0302

Electrician Wiring Schematic

