Digital Series • Full Specifications

Product Wiring Diagram

XMTD / XMTA-2001, 2002

AC Contactor Wiring Diagram

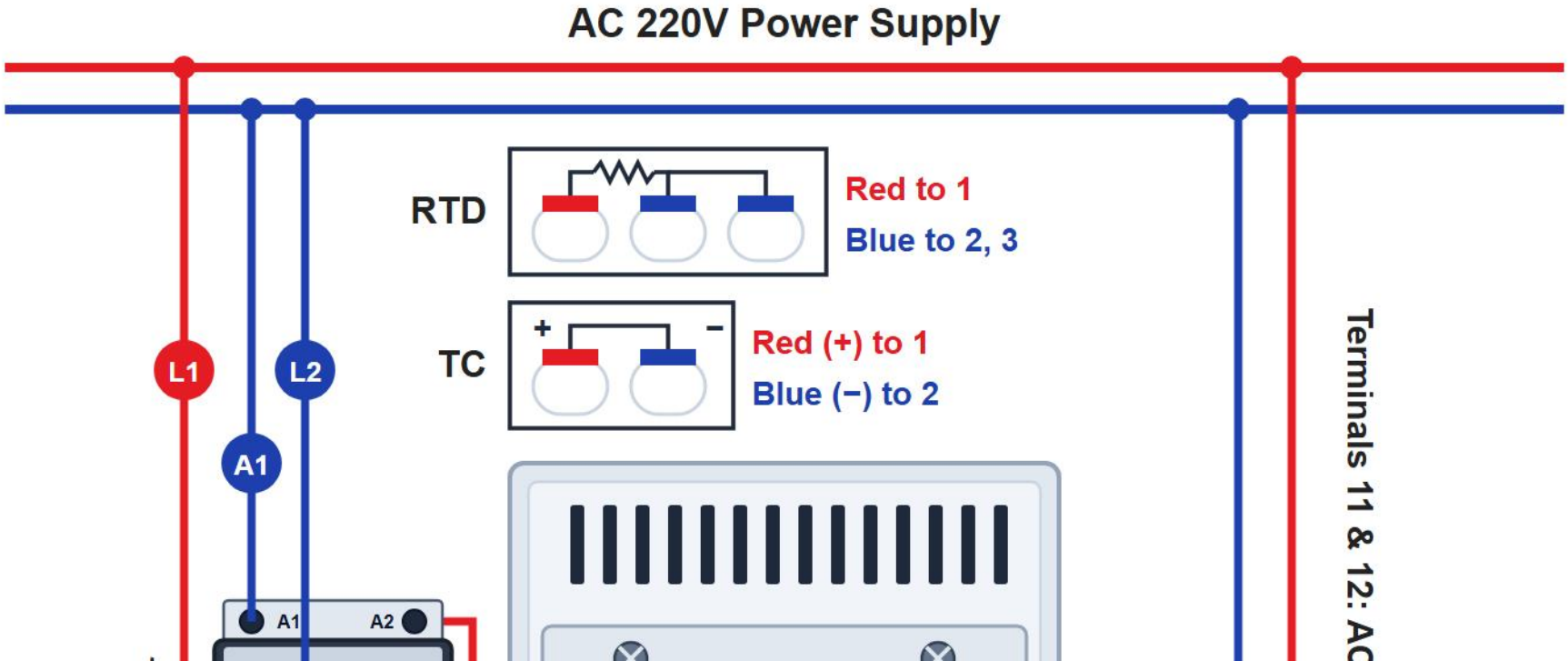

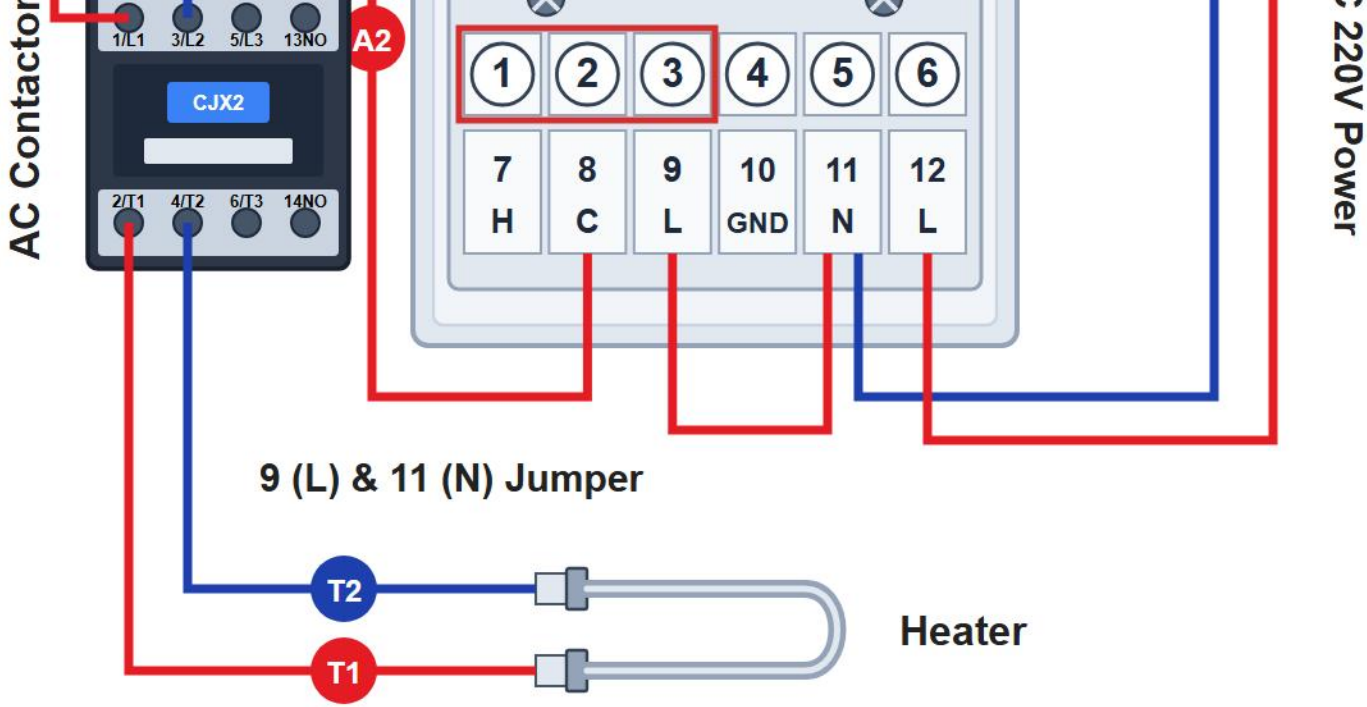

Note: 220V and 380V power supply models use the exact same wiring (only internal transformer differs).

XMTD / XMTA-2001, 2002

Electrician Wiring Diagram



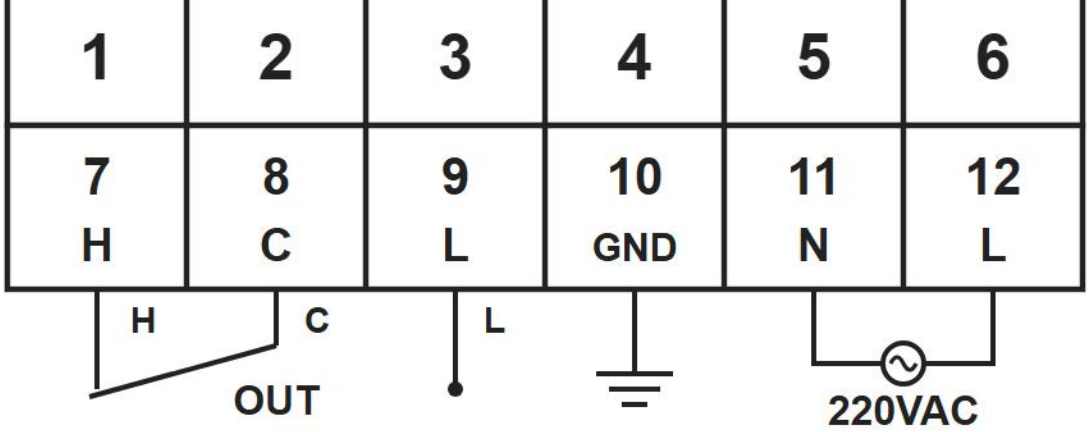
1
2
3
4
5
6
7
H
8
C
9
L
10
GND
11
N
12
L
H
C
L
OUT
220VAC